Chapter 5

Design of Concrete Foundations

© Dr. Eng. Wael Hassan
All rights reserved.
Academic use OK.
Commercial design use OK.
Commercial educational use prohibited.

© Copyrights

By

Dr. Eng. Wael Hassan

© Eng. Wael Hassan
All rights reserved.
Academic use OK.
Commercial design use OK.
Commercial educational use prohibited.

Design of Isolated Footings

1- Calculation of Column Load "P_u"

from structure analysis of floors

$P_u = \Sigma$ Reactions from Beams $* 1.05$ → effect of o.w. of column.
$*$ No. of floors

2- Design of Column cross sec

$$P_u = 0.35\, f_{cu}\, A_c + 0.67\, f_y\, A_{sc} \longrightarrow ①$$

A_c : $b * t$ dim. of Column.

A_{sc} : $0.01\, A_c$ area of Longitudinal steel.

from eq ① get $A_c = b * t$

$b = t = \sqrt{A_c}$ يفضل أخذ العمود مربع ما أمكن ذلك

إلا إذا الأبعاد المعمارية أجبرتنا نأخذه مستطيل وفي هذه

الحالة سيكون أحد البعدين (غالبا b) معروف ،

3- Design of Isolated footing :-

VIN: Deal with foundation Design using

Working Loads "P_W"

$\therefore P_W = \frac{P_u}{1.5}$ ton column working Load "P_W"

- Concentrically Loaded Isolated footing.

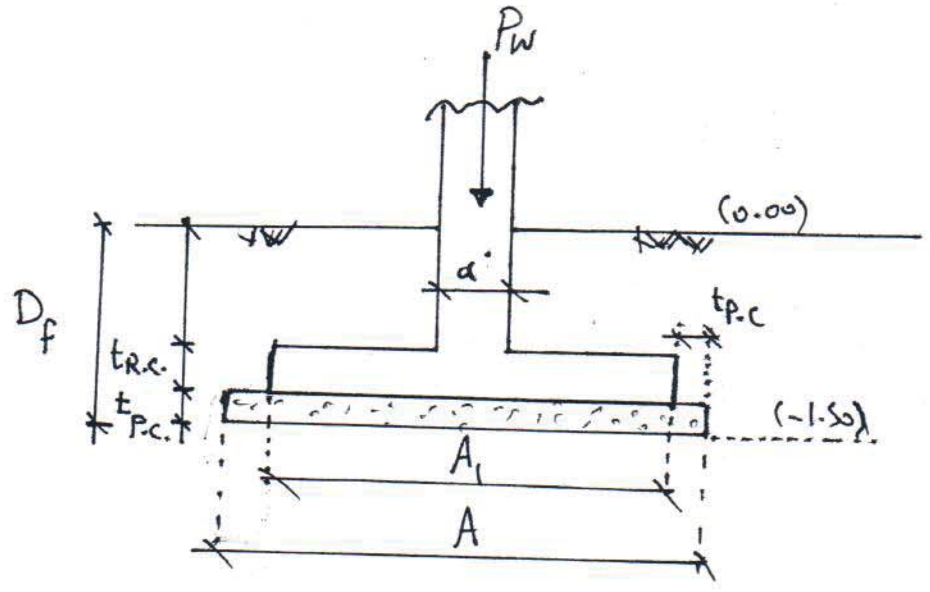

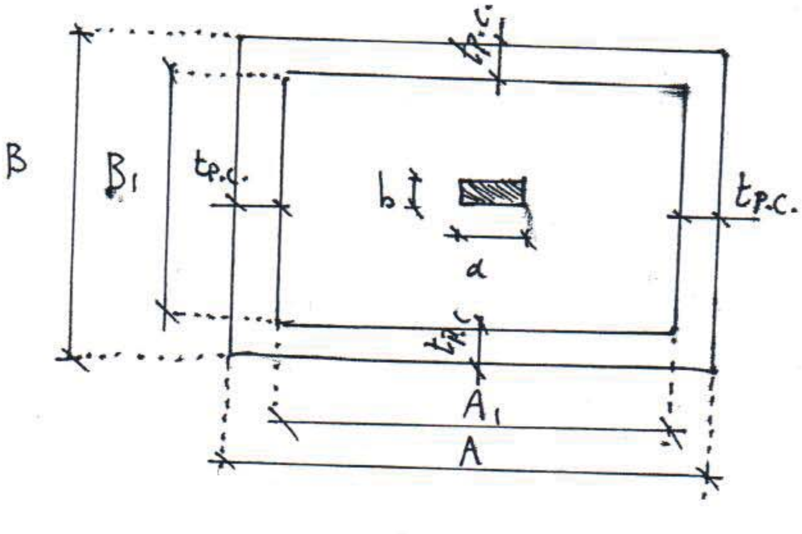

steps of Design

1. Desig of P.C. footing

Guide to choose $t_{P.C.}$

P_W ton	0-50	50-100	100-200	200-400	≥400
$t_{P.C.}$	0.2-0.3	0.3-0.4	0.4-0.5	0.50-0.60	0.60-0.80

usually $t_{P.C} = 30cm$

- Dimensions of P.C. footing.

$$A * B = \frac{P_t}{B.C._{gross}} \quad \text{------}\rightarrow (i)$$

- B.C.gross : gross Bearing Capacity of soil = 1.5 kg/cm²
  = 15 t/m² if not given

$P_w \longrightarrow B.C._{net}$
$P_t \longrightarrow B.C._{gross}$

- $P_t = 1.15 P_w$ (1.15 : To take (وزن رقبة العمود + وزن الـ soil / وزن القاعدة نفسها)

Case 1

If square Column $a = b$ $\therefore A = B$

$\therefore A = B = \sqrt{A * B}$

ونقرب لأكبر ٥ – ١٠ سم بالزيادة

Case ②: Rectangular Column

$a \neq b$

It's preferrable to take $A - B = a - b$ ----→ (ii)

لتسهيل الحل.

or $A - a = B - b$

Knowing a, b & solving (i), (ii) get A, B

$$A = B - b + a$$

$$B\,(B - b + a) = \frac{P_t}{B.C_{gross}} \qquad f(B)$$

A ← get B ← B معادلة من الدرجة الثانية من

وتقرب A ، B لأقرب ٥ سم بالزيادة

١٠ سم

2- Design of R.C. footing

$$A_1 = A - 2 * t_{P.C.}$$
$$B_1 = B - 2 * t_{P.C.}$$
} get A_1, B_1

get P_n : net stress under R.C. footing

(بين ال P.C وبين ال R.C.)

$$P_n = \frac{P_w}{A_1 * B_1} \quad t/m^2$$

P_w → force

$A_1 * B_1$ → area of R.C. footing

✓ رزقيل

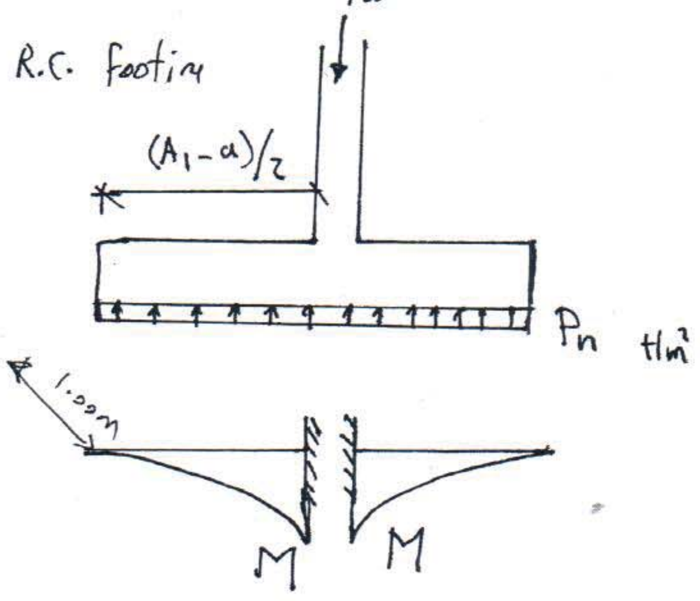

i. Moments of R.C. Base

M: m.t/m` شريحة

$$M_{1-1} = P_n * 1 * \frac{(A_1 - a)^2}{8} * 0.85$$

$$M_{2-2} = P_n * 1 * \frac{(B_1 - b)^2}{8} * 0.85$$

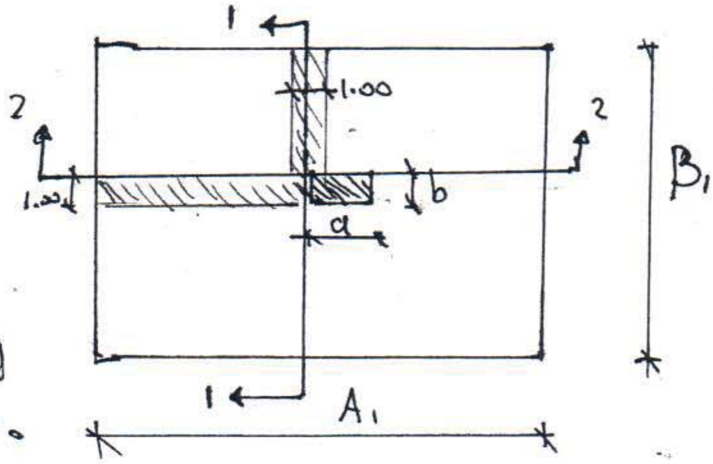

0.85: لتقليل Reduction العزوم من الناحية

• نظراً لتكرار مساحة واحدة مرتين.

• ونظراً لأنه وجود عزوم في الاتجاهين يحصل نوعاً ما

• Design of sections of R.C. footing:

• $M_u = 1.5\,M_{1-1} = 1.5\,M_{2-2}$

• $b = 100$ cm (strip)

• $t_{R.C.}$

① Enter R-W curve with d, As unknown

(assume $R < R_{max}$)

($t_{R.C.} \nless 50$ cm مع مراعاة)

② Assume $t_{R.C.} = 50$ cm

As ⟵ (R-W) ونفرض

* 8Φ22/m'

③ Assume $t_{R.C.}$

∴ (R-ω) curve

$M_u = ✓$

$b = 100$ ✓

$d = t_{R.C.} - 5$ cm

get $A_s = —\ \phi\ — /m'$

(Hint $A_{s,min} = 0.15\ t_{R.C.}$ cm^2/m')

ii- Check of Punching of R.C. footing :-

$$q_{up} = \frac{Q_{up}}{b_o \, d_{R.C.}}$$: applied Punching stress. kg/cm²

$$Q_{up} = 1.5 \, Q_{wp}$$

$$Q_{wp} = P_w - P_n (a+d)(b+d)$$

$$b_o = 2 \left[(a+d) + (b+d) \right]$$

$$d_{R.C.} = t_{R.C.} - 5 \text{ cm}$$

Allowable Punching stress q_{cup}

$$q_{cup} = \text{smallest of} \begin{cases} 2.5\left(\frac{\alpha \cdot d}{b_o} + 0.2\right)\sqrt{\frac{f_{cu}}{\gamma_c}} \\ \left(0.50 + a/b\right)\sqrt{f_{cu}/\gamma_c} \\ \sqrt{f_{cu}/\gamma_c} \end{cases}$$

α : 4 (concentric footing)

a : smaller dim. of col.

b : Larger dim of column

if $q_{up} \ngtr q_{cup}$: safe

if $q_{up} > q_{cup}$ unsafe

increase $t_{R.C.}$

iv. Check of Shear

يتم عمله مثل الكمرات المدفونة و البلاطات

وعادة يكون safe

$$q_{u_{footing}} = \frac{Q_{u\,(t/m')} * 1000}{b\, d_{R.C.}}$$

$q_{u_{footing}}$: applied shear stress

$$\underset{t/m'}{Q_u} = P_n \left(\frac{A_1 - a}{2} \right) - P_n \cdot d/2 \quad t/m'$$

$b = 100$ cm $\qquad d_{R.C.} = t_{R.C.} - 5$

$q_{cu_{footing}}$ = Allowable shear stress

11

$$q_{cu\,footing} = 1.30 * 0.5 * 0.75 \sqrt{f_{cu}/\gamma_c}$$

$q_u \leq q_{cu}$ ∴ safe

$q_u > q_{cu}$ ∴ unsafe

increase $t_{R.C.}$

V. Check of Bond :-

Mild steel ⟶ check of Bond

✓✓ H.G.S. ⟶ check L_d

$$L_{d\,\text{Botten}_{\text{Ten}}} = 60\,\phi = ____$$

قطر الـ Max Ten.

check

$$\text{Actual length} = \frac{A_1 - a}{2} + d_{R.C.}$$

$$\text{check Act. Length} \geq L_{d\,\text{Bot}_{\text{Ten.}}}$$

check La :-

L_a : measured from min. Ten.

$$L_a = 0.7d, \quad = 10\phi \quad \text{larger.}$$

check $d_{R.C.} \geq L_a$

* Reinforcement Detailing

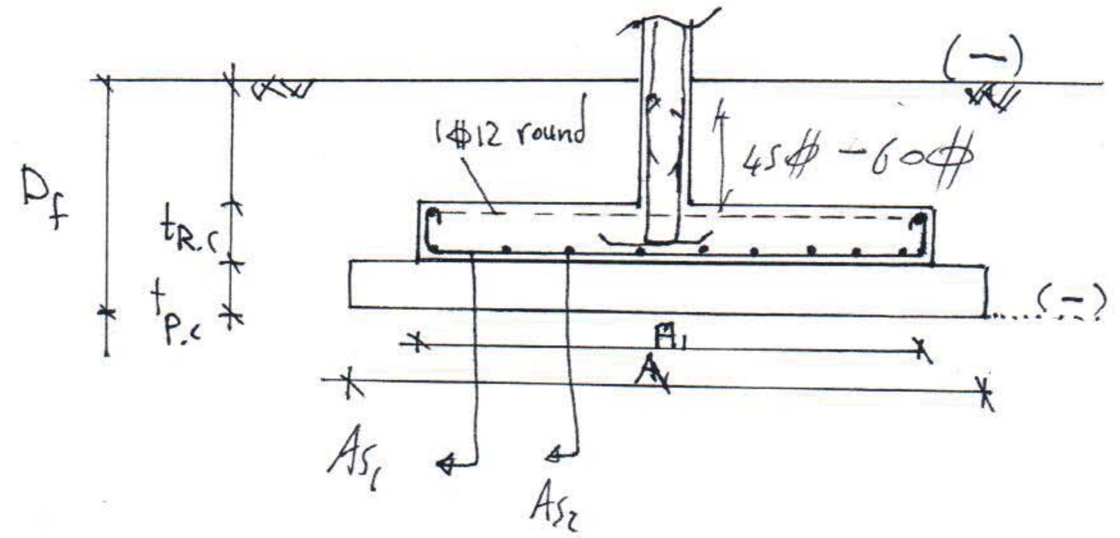

A_{s1} , A_{s2}

$\not< 5\phi/m$

$\not> 10\phi/m$

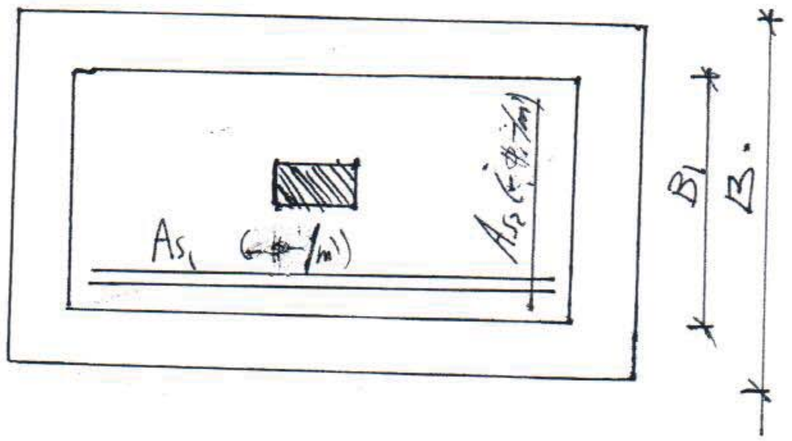

Notes

١- ممكن تحديد عدد أسياخ A_{s1} , A_{s2} الكلي بضرب × B_1 , A_1 على الترتيب

٢- الـ cover الكلي في الأساسات ٧ سم

٣- Empirical : $t_{R.C.}$ ممكن تحديدها حسب عدد الأدوار ولا تقل عن ٥٠ سم.

5 floors $\longrightarrow t_{R.C.} = 50$ cm

• R. C. Footings •

• Solved Example •

• Example 1 :

For a given ultimate column Load of 180 ton & soil gross bearing capacity of 1.50 kg/cm², Design the isolated foundation footing required to support this column.

$f_{cu} = 250$ kg/cm² $f_y = 3600$ kg/cm² column x-sec width = 25 cm

• Solution •

① Design of Column x-sec.

$$P_u = 0.35 f_{cu} A_c + 0.67 f_y A_{sc}$$

$$180 * 10^3 = 0.35 * 250 * (25 * t) + 0.67 * 3600 * 0.01 (25 * t)$$

$\therefore t = 64.5$ cm use $t = 70$ cm

(2) Design of Isolated footing.

2-i- P.C. footing

$$P_w = P_u/1.50 = 120 \text{ ton}$$

take $t_{P.C.} = 40$ cm

Dimensions of P.C. footing

$$A * B = \frac{1.15 * 120 * 10^3}{1.5} = 92000 \text{ cm}^2 = 9.2 \text{ m}^2$$

$\therefore$ $AB = 9.2 \rightarrow (1)$

It is preferrable to take $A - a = B - b$

$\therefore$ $A - 0.70 = B - 0.25$

$\therefore$ $A - B = 0.45 \rightarrow (2)$

Solve (1) & (2)

$$A = B + 0.45$$

$\therefore$ $B(B + 0.45) = 9.2$

$\therefore$ $B^2 + 0.45B - 9.2 = 0$ $\therefore B = 2.82$ m $\therefore A = 3.26$ m

take $A = 3.30$ m $B = 2.85$ m

2. ii. Design of R.C. footing

$$A_1 = A - 2\,t_{P.C.} = 3.30 - 2 * 0.40 = 2.50\ m$$

$$B1 = B - 2t_{P.C.} = 2.85 - 2 * 0.40 = 2.05\ m$$

Get $P_n = \frac{P_w}{A_1 B_1} = \frac{120}{2.5 * 2.05} = 23.4\ t/m^2$

i* Moment of R.C. Base

$$M_{I\text{-}I} = M_{II\text{-}II} = P_n * \frac{(A_1 - a)^2}{8} * 0.85$$

$$= 23.4 * (3.3 - 0.7)^2 / 8 * 0.85 = 16.8\ m.t/m'$$

ii - Design of Section for flexure.

Get depth of R.C. footing & A_s using (R-ω) curve

- assume $R < R_{max}$ (assume $R = 0.06$) for Ex. (or assume $d = 45$ cm)
- $M_u = 1.5\,M_w = 1.50 * 16.8 =$ $m.t/m'$
- Assume $d = 45$ cm ($t_{R.C.} = 50$ cm)

$\therefore R = \frac{25.2 * 10^5}{250 * 100 * 45^2} = 0.05$ $\therefore \omega = 0.065$

$\therefore A_s = 20\ cm^2/m'$ use 6 Φ 22/m' both dir.

iii- Check of Punching (ECCS 2001 P (4-22))

$q_{up} = \frac{Q_{up}}{b_o d}$ applied Punching stress

$b_o = 2[(0.7+0.45)+(0.25+0.45)] = 3.70\,m$

$Q_{p_w} = P_w - P_n(a+d)(b+d)$; $Q_{p_u} = 1.5\,Q_{p_w}$

$\therefore Q_{p_u} = 1.5(120 - 23.4(0.7+0.45)(0.25+0.45)) = 151.74\,t$

$\therefore q_p = \frac{151.74}{3.70 * 0.45} = 91.14\,t/m^2 = 9.114\,kg/cm^2$

Allowable Punching Stress

q_{cup} = smallest of
- $\rightarrow 2.5\left[\frac{\alpha d}{b_o} + 0.2\right]\sqrt{f_{cu}/\gamma_c}$
- $\rightarrow (0.5 + a/b)\sqrt{f_{cu}/\gamma_c}$
- $\rightarrow \sqrt{f_{cu}/\gamma_c}$

$\therefore q_{cup}$ = smallest of
- $\rightarrow 2.5\left[\frac{4*45}{370} + 0.2\right]\sqrt{250/1.5} = 22.14\,kg/cm^2$
- $\rightarrow (0.5 + 25/70)\sqrt{250/1.5} = 11.06\,kg/cm^2$ ✓
- $\rightarrow \sqrt{250/1.5} = 12.9\,kg/cm^2$

$\therefore q_{up} < q_{cup}$ $\therefore$ OK

iv- Check of Shear

Critical section of shear is at $d/2$ from Column face

$$\therefore Q_w = P_n * 1 * \left[\frac{A_1 - a}{2} - d/2\right]$$

$$\therefore Q_w = 23.4 * 1 * \left[\frac{3.50 - 0.7}{2} - \frac{0.45}{2}\right] = 15.79 \ t/m'$$

$$\therefore Q_u = 1.5\, Q_w = 23.7 \quad t/m'$$

check of shear as for Hidden Beams ECCS P.(4-21)

$$\therefore q_u = \frac{Q_u}{bd} = \frac{23.7 * 10^3}{100 * 45} = 5.27 \ kg/cm^2$$

(100 → strip)

$$q_{cu_{footing}} = 1.3 * 0.5 * q_{cu} = 0.488\sqrt{f_{cu}/\gamma_c} = 6.3 \ kg/cm^2$$

$$q_u < q_{cu_{footing}} \quad \therefore \text{ safe}$$

V. Check of Development Length   ECCS (4-41, 4-43)

$Ld_{Ten_{Bottom}} = 60\,\phi$ table (4-9)

Get Reinforcement steel $(6\,\phi\,22/m')$

$\therefore$ use $6\,\phi\,22/m'$

$As_{min} = 0.15 * t_{R.C.} = 0.15 * 50 = 7.50\ cm^2/m' < A_s$

$\therefore$ Development Length $= Ld = 60\,\phi = 60 * 22 = 132\ cm$

Check Enough R.C. Base Length

$\frac{B - b}{2} + d = \frac{205 - 25}{2} + 45 = 135 > Ld \therefore ok$
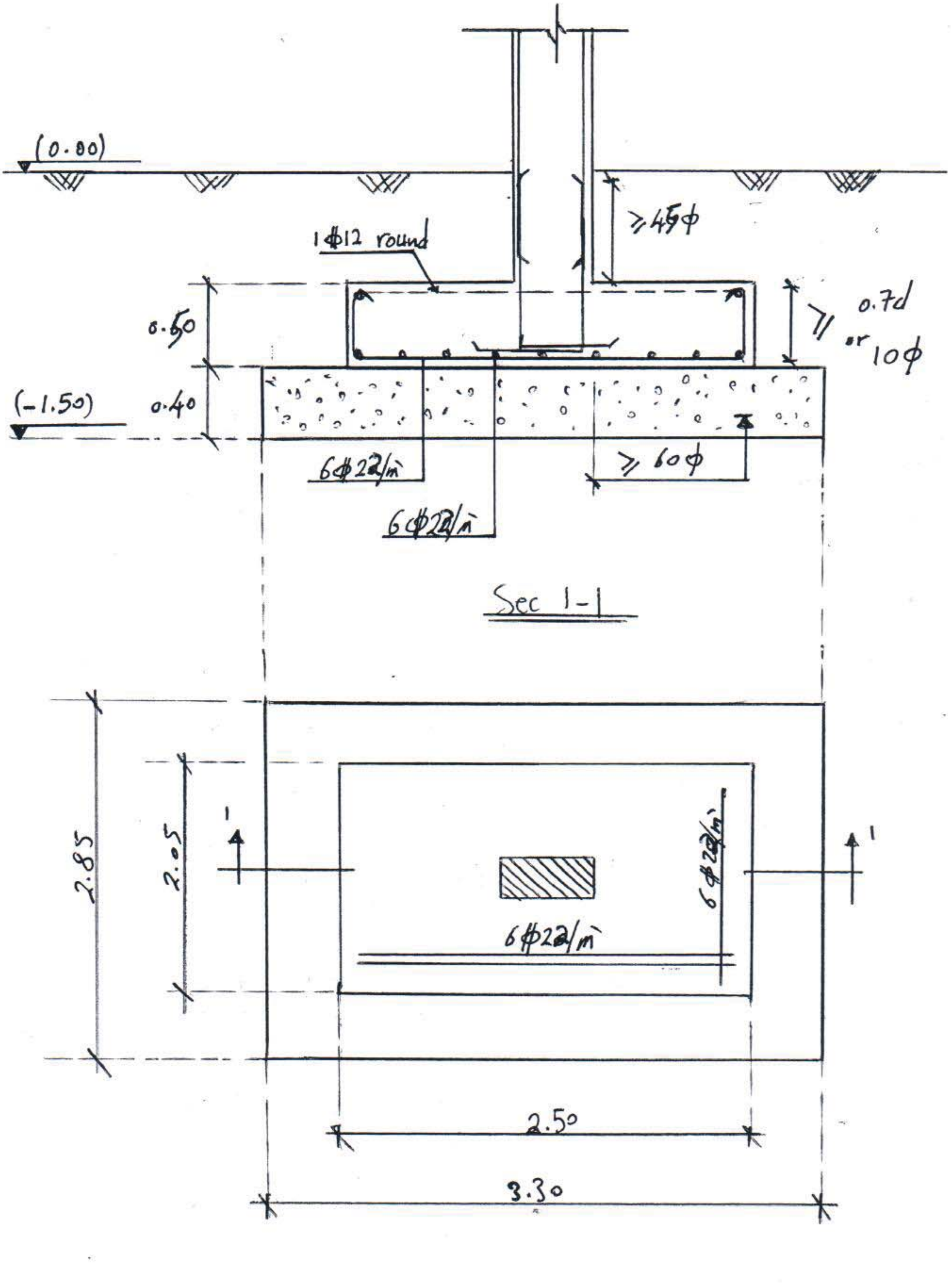
Reinforcement Detailings.